BROAN®

SPECIFICATION SHEET

MODEL 46000 4-WAY CONVERTIBLE RANGE HOOD

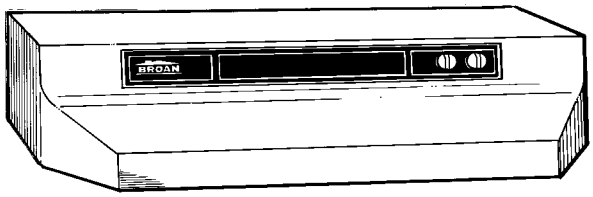

Deluxe features in our smaller shell - offers the most hood for the money.

FEATURES

- Infinite speed fan control
- Polymeric blade and light lens (accepts up to 75W bulb)
- Washable aluminum filter
- Converts to non-ducted by removing cover plate from control panel and installing the non-ducted filter (purchase separately)
- Mitered sides and hemmed bottom for safety and good looks
- Damper/duct connector included
- 7" round plate included
- Contemporary styling in White, Almond, Biscuit and Stainless Steel
- Available in 24", 30", 36" and 42" widths
- **Special Order Color -** Black (24", 30" and 36" only)

SPECIFICATIONS

VOLTS	AMPS	CFM	SONES	DUCT
120	2.5	190	7.5	3¼" X 10" (H)
120	2.5	190	7.5	3¼" X 10" (V)
120	2.5	220	7.5	7" Round (V)
120	2.5	-	-	Non-Ducted

TESTED/CERTIFIED 2100 HVI Home Ventilating Institute DIVISION OF AMCA

HVI-2100 CERTIFIED RATINGS comply with new testing technologies and procedures prescribed by the Home Ventilating Institute, for off-the-shelf products, as they are available to consumers. Product performance is rated at 0.1 in. static pressure, based on tests conducted in AMCA's state-of-the-art test laboratory. Sones are a measure of humanly-perceived loudness, based on laboratory measurements.

TYPICAL SPECIFICATION

Range hood shall be Broan Model 46000.

Unit shall be convertible between ducted (using a washable aluminum filter) and non-ducted (using a Microtek® System II filter).

Motor to be permanently lubricated. RPM not to exceed 3250.

Unit shall have infinite speed fan control with separate light/night light switch.

Sides shall be mitered and bottom edge hemmed - with no sharp edges.

Air delivery shall be no less than 190 CFM (3¼ x 10 discharge) and 220 CFM (7" round discharge) and sound levels no greater than 7.5 Sones. All air and sound ratings shall be certified by HVI.

Unit shall be U.L. listed.

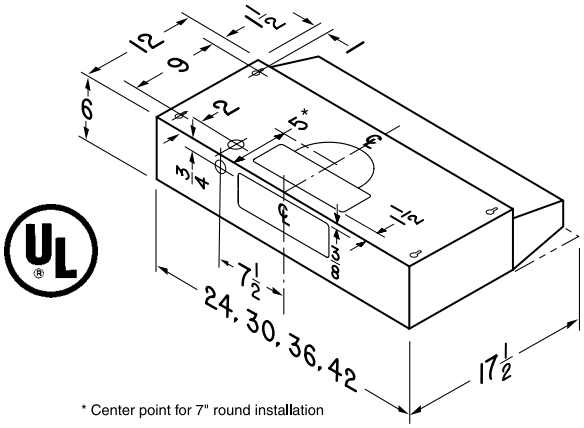

* Center point for 7" round installation

Broan-NuTone LLC, 926 West State Street, Hartford, WI 53027 (1-800-637-1453)

REFERENCE	QTY.	REMARKS	Project
			Location
			Architect
			Engineer
			Contractor
			Submitted by Date